POLYMAX

Typical Membrane Flashings

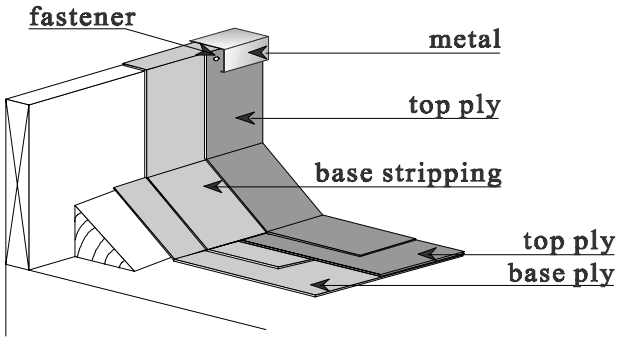

Detail 1: CURB FLASHING

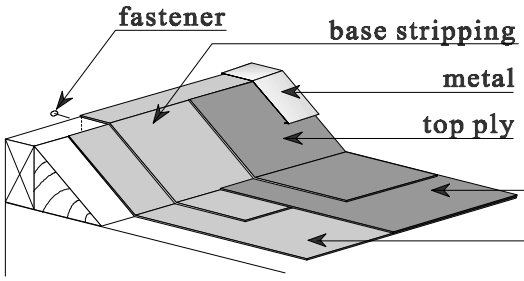

Detail 2: CANT

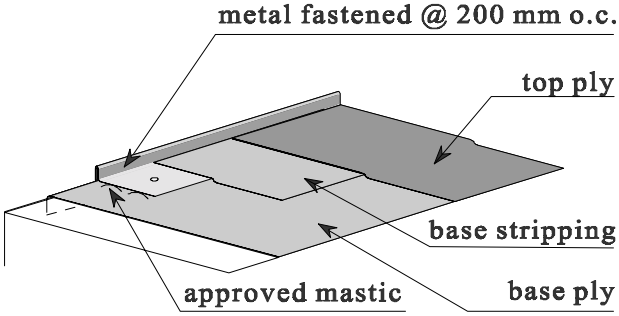

Detail 3: GRAVEL STOP

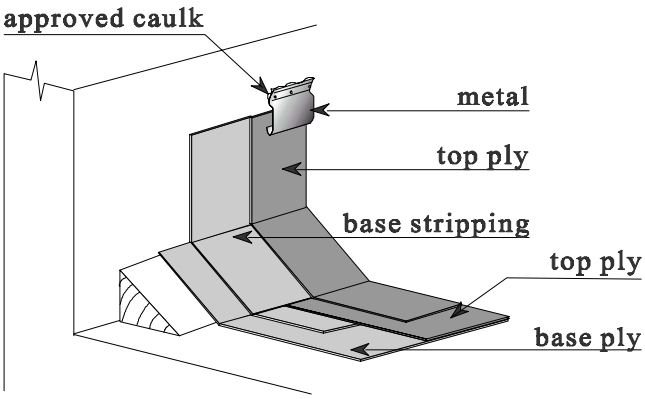

Detail 4: ROOF/WALL JUNCTION

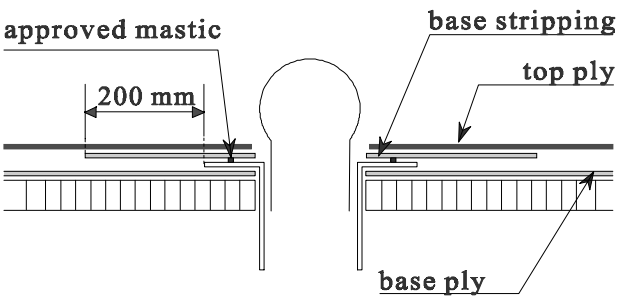

Detail 5: TYPICAL DRAIN DETAIL

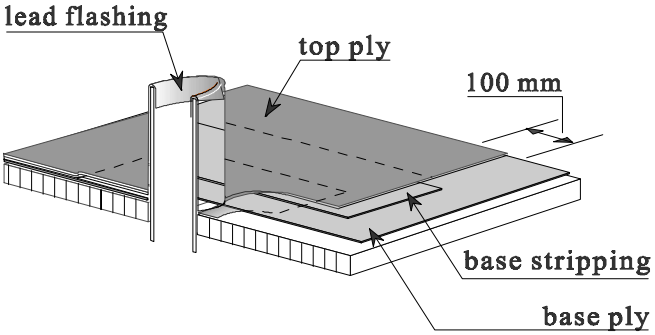

Detail 6: VENT PIPE OR ROOF JACK

HAL INDUSTRIES INC.
PROTECTIVE CONSTRUCTION MEMBRANES

WEBSITE www.halind.com
9681 - 187 St., Surrey, B.C., Canada V4N 3N3

Telephone: **(604) 888-0777**
Toll Free: **1-800-663-0076**
Fax: **(604) 888-1656**